Hakuto 伯東









HiScroll 6, scroll pump, without gas ballast, including ATEX

PFEIFFER

HiScroll 6



Illustration only

HiScroll 6, scroll pump, without gas ballast, including ATEX

- No hydrocarbons: Completely dry & oil-free Scroll vacuum pump
- Low noise level, minimal vibrations and compact design, ideal also for use in laboratories
- Safe operation due to the installed non-return valve and hermetically sealed pumping system
- Low operating costs thanks to the highest quality, short maintenance times and long maintenance intervals
- Power as required: Stable pumping speed and short cycle times
- Sustainable: 15 % higher efficiency of the drive system, lower heat generation and lower cooling requirements
- Industry 4.0 compatible: Operation with other intelligent products, such as turbopumps via RS-485
- Simple logistics: Our HiScroll pumps are suitable for all voltages worldwide

HiScroll 6

Characteristics

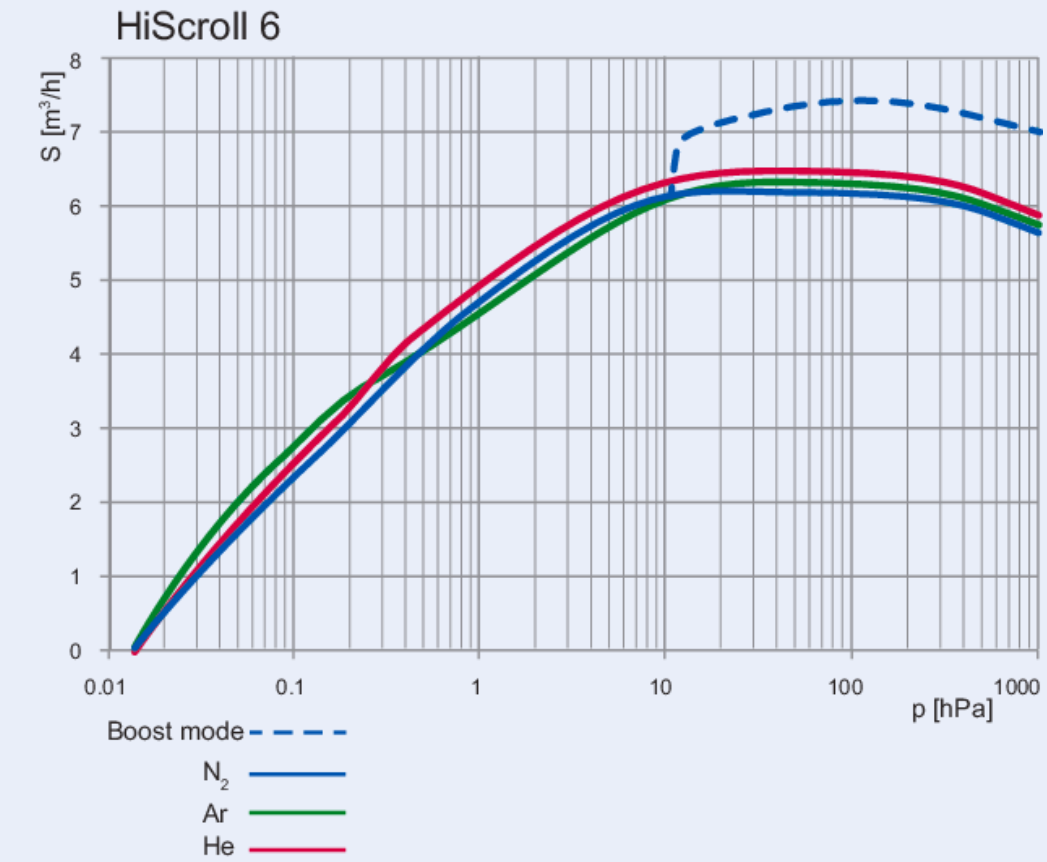

HiScroll 6

Dimensions

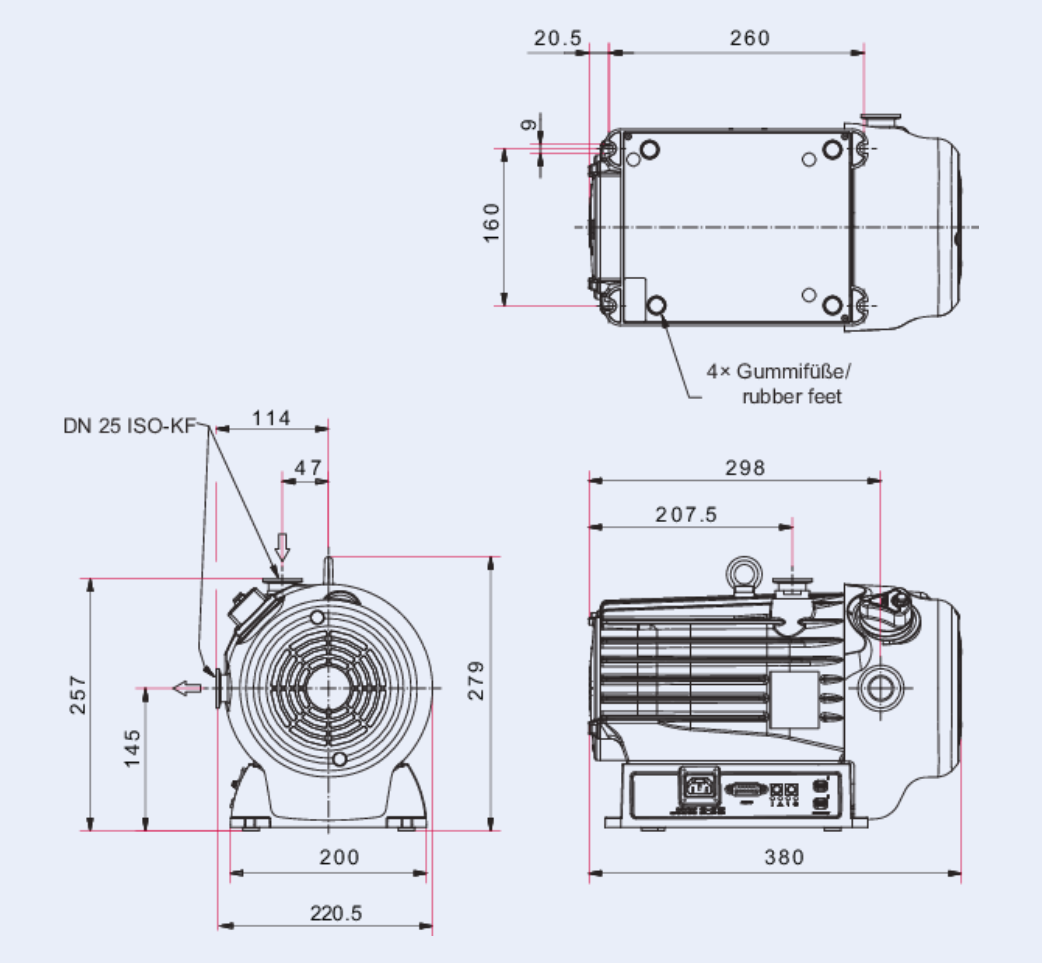

HiScroll 6

Technical Data	HiScroll 6, scroll pump, without gas ballast, including ATEX
Gas ballast	No
Cooling method	Air (Forced convection)
Motor protection	Internal
I/O interfaces	RS485
Ambient temperature	5 – 40 °C
Certification	Semi S2 compatible | Semi S8 compatible | cTUVus certified according to UL / CSA 61010-1
ATEX-certification	Ex II 3/-G Ex h IIC T4 Gc X +5 °C ≤ T_a ≤ +40 °C
Pumping speed	6.1 m^3/h
Input voltage(s)	100 – 127 / 200 – 240 V AC (±10 %), 50/60 Hz
Emission sound pressure level (EN ISO 2151)	≤48 dB(A)
Ultimate pressure	$1.5 \cdot 10^{-2}$ hPa | $1.125 \cdot 10^{-2}$ Torr | $1.5 \cdot 10^{-2}$ mbar
Tested base pressure	$1.5 \cdot 10^{-2}$ hPa | $1.125 \cdot 10^{-2}$ Torr | $1.5 \cdot 10^{-2}$ mbar
Exhaust pressure, max.	1,500 hPa | 1,125 Torr | 1,500 mbar
Switch	Yes
Rotation speed	1000 – 3000 rpm
Nominal rotation speed	2,500 rpm | 2,500 min^{-1}
Operating altitude, max.	3,000 m
Intake pressure max.	1,100 hPa | 825 Torr | 1,100 mbar
Mains cable	No
Dimensions (L x W x H)	380 x 220 x 257 mm
Connection flange (in)	DN 25 ISO-KF
Connection flange (out)	DN 25 ISO-KF

Order number	HiScroll 6, scroll pump, without gas ballast, including ATEX
HiScroll 6, scroll pump, without gas ballast, including ATEX	2000026555

Accessories	HiScroll 6, scroll pump, without gas ballast, including ATEX
Maintenance kit tip seal for HiScroll 6	2000026535
Valve kit for HiScroll 6/12/18	2000026538
Spare parts kit - cover+fan for HiScroll 6	2000026539

伯东企业（上海）有限公司

HAKUTO ENTERPRISES (SHANGHAI) LTD.

TEL: (86) 21-5046 3511

上海伯东 -- 您理想的真空合作伙伴！

伯东公司成立于 1953 年，外企上市企业，全球范围内有一千七百名员工，集团年营业额约为 100亿人民币.

伯东公司在国内主要城市：上海，北京，苏州，广州，深圳，成都及厦门设有营业据点.

上海伯东真空产品事业部已累计为超过 10,000 家企业提供真空服务

我们致力于追求高品质的服务，为您提供一流的服务及一流产品：

品质保障：国际知名品牌指定授权代理商，所有产品及部件保证 100% 原厂原装进口

现货交期快：部分产品有现货，下单立即发货（现货数量有限，实际情况请联系销售工程师）

卓越维修能力：伯东工程师拥有10年以上维修经验，且受国外专业培训，拥有完全的拆解，维修，校正能力.

完美服务质量：原装进口检测设备全方位寻找问题症结及全方面的性能测试，确保完美的服务质量



伯东企业（上海）有限公司 销售及售后服务中心

上海浦东新区新金桥路1888号36号楼7楼702室

电 话：+86-21-5046-3511 / 139-1883-7267

传 真：+86-21-5046-1490

官 网：http://www.hakuto-vacuum.cn